ASSEMBLY INSTRUCTIONS

SKU: VB60

EAST WEST FURNITURE, LLC
175 Southbelt Industrial Dr,
Houston, TX 77047
Email:sales@eastwestfurniture.net

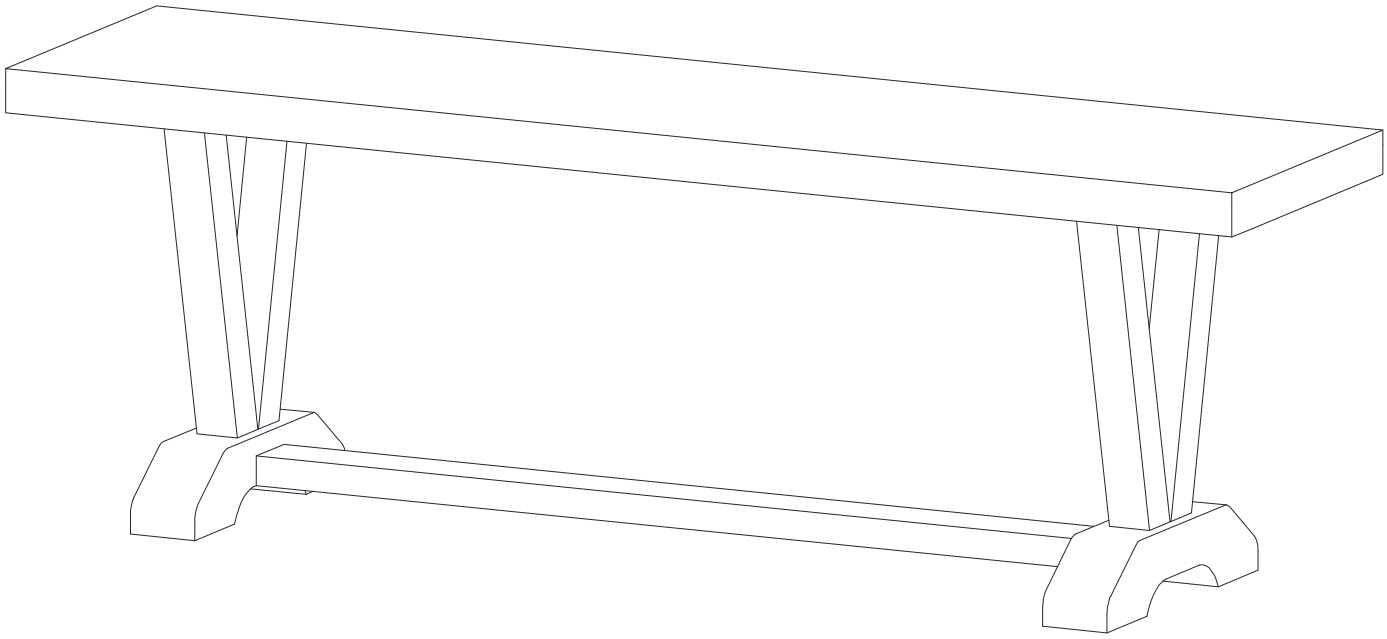

Description : V-Style 60 in long Dining Bench

Product Dimension : 60"Wx15"D x18"H

Cube Size	: 62.7 IN x 17.5 IN x 2.9 IN (TOP)	NW: 18.7	LBS
		GW: 22	LBS
Cube Size	: 46 IN x 3.1 IN x 1.5 IN (CROSS BAR)	NW: 3.3	LBS
		GW: 4.4	LBS
Cube Size	: 20 IN x 17.5 IN x 7.2 IN (LEG)	NW: 9.9	LBS
		GW: 12.1	LBS

V-Style 60 in long Dining Bench

BEFORE ASSEMBLY

Thank you for purchasing this quality product. This product has been designed for easy assembly and constructed for durability. Please take the time to read and follow the assembly instructions carefully.

Be sure to check all packing material carefully for small parts which may have come loose inside the carton during shipment. Please separate, identify, and count all parts and metal hardware. Compare with part list to be sure all parts are present.
If hardware is missing or you have difficulty assembling this product, please call for us.

IMPORTANT NOTE:

- Place all wooden parts on a clean and smooth surface such as a rug or carpet to avoid the parts from being scratched.
- Remove all wrapping material, including staples & packing straps before you start to assemble.
- DO NOT tighten all screws and bolts until completely assembled.
- Keep all hardware parts out of reach of children.

PART LIST

When unpacking, please be careful not to discard any parts with the packaging. Before continuing, please make sure you have the following parts:

NO	Description	Qty	Sketch	NO	Description	Qty	Sketch
A	Top	1	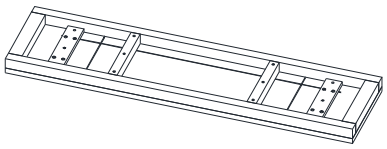	B	Leg	2	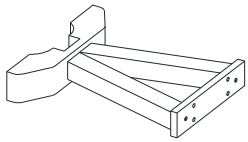
C	Cross bar	1					

HARDWARE LIST

When unpacking, please be careful not to discard any parts with the packaging. Before continuing, please make sure you have all of the following hardware:

NO	Description	Qty	Sketch	NO	Description	Qty	Sketch
1	Long Bolt (M6x45)	4		2	Short Bolt (M6x35)	8	
3	Lock washer (Φ6.5xΦ 9mm)	12		4	Flat Washer (Φ6.5xΦ19mm)	12	
5	Allen key (M4mm)	1	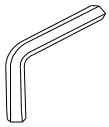				

STEP 1

Attach legs (B) to the Cross bar (C) with Bolts (1) and washers (3), (4). Tighten with the Allen Key (5).

Note: DO NOT tighten any bolt until the bench is fully assembled.

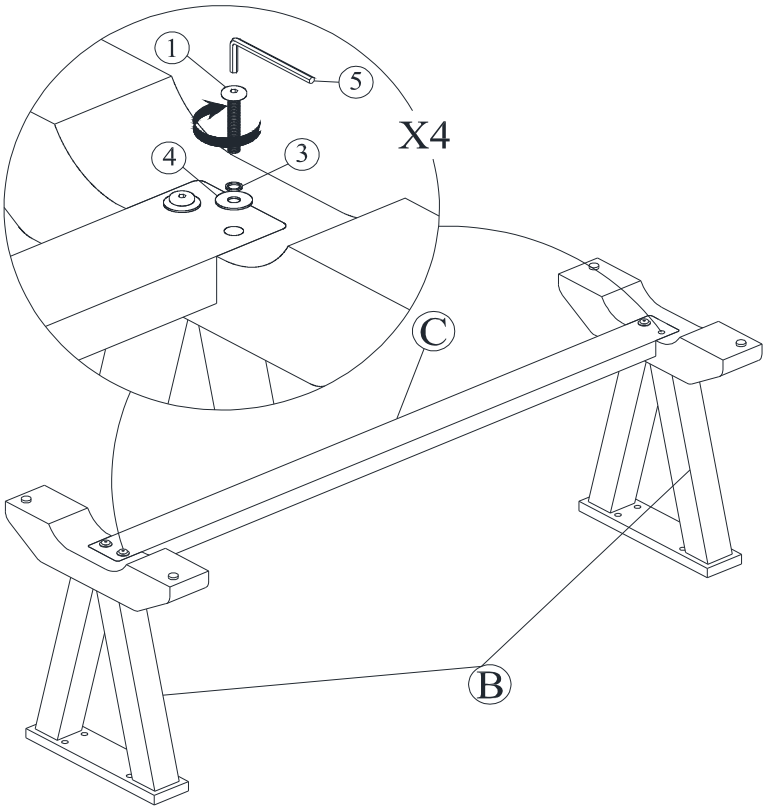

STEP 2

Attach Legs (on step1) to the Top (A) with Bolts (2) and washers (3), (4). Tighten with the Allen Key (5).
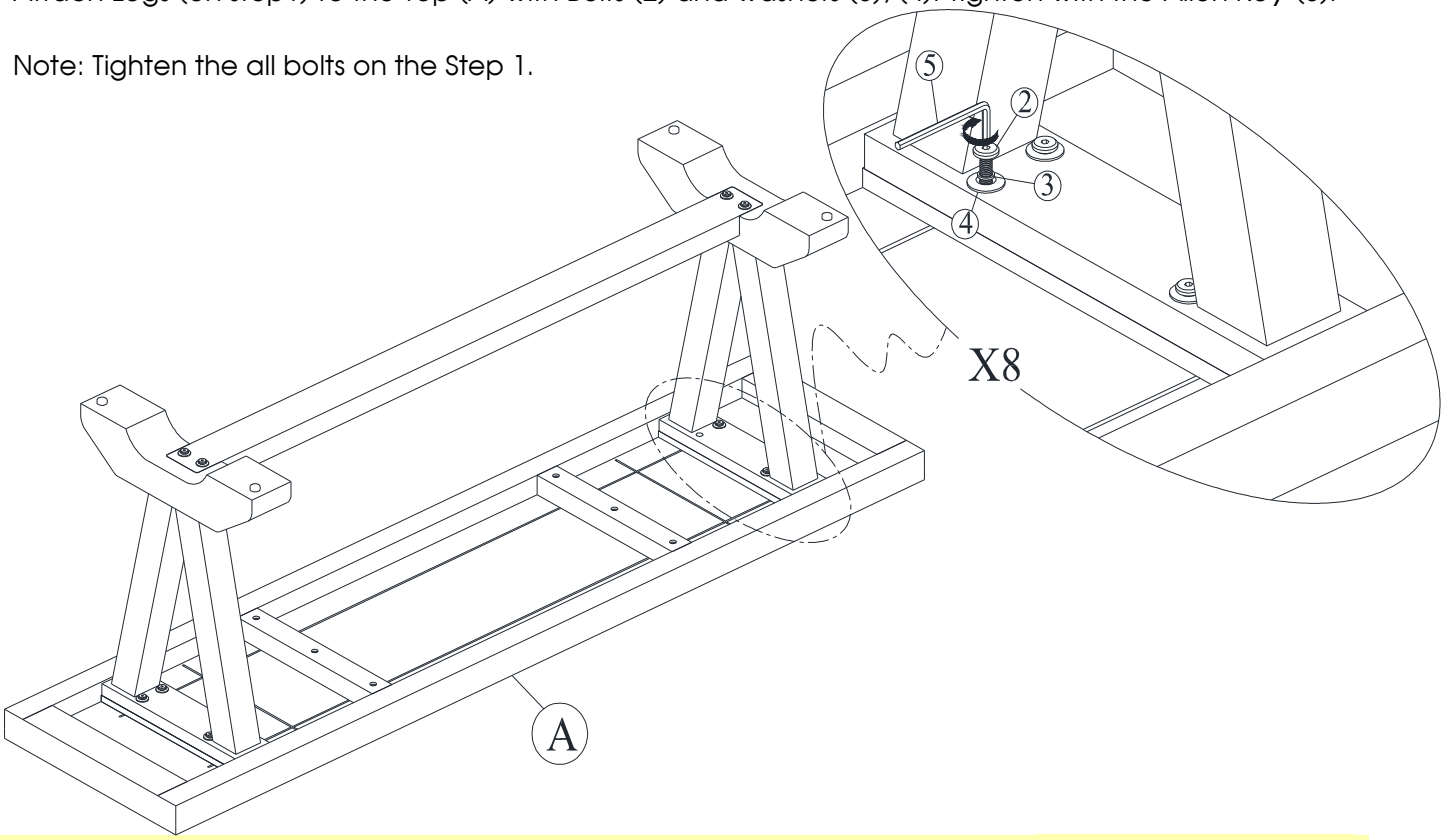
Note: Tighten the all bolts on the Step 1.