ASSEMBLY INSTRUCTIONS

SKU: BOC-W

EAST WEST FURNITURE, LLC
175 Southbelt Industrial Dr
Houston, TX 77047
Email: info@eastwestfurniture.net

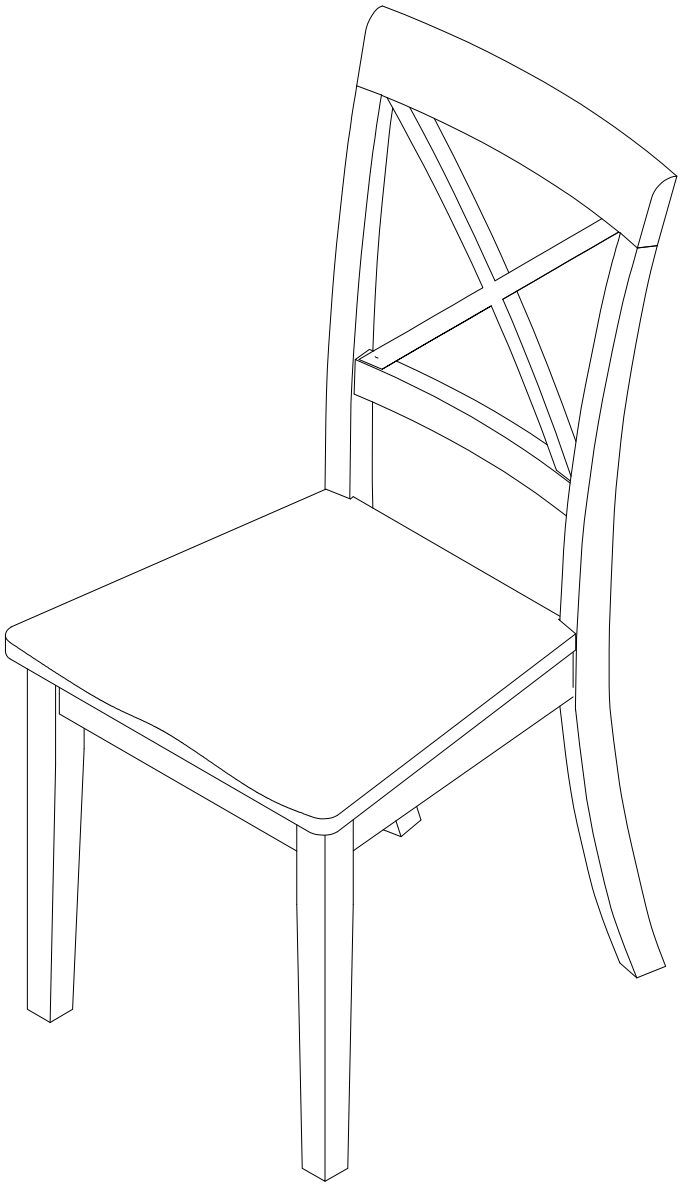

Description : *BOSTON X-BACK CHAIR WITH WOOD SEAT*
Dimension : *18”Wx21"1/2Dx38"1/2H*

Cube Size : 40.7”x18.4”x9.1”

NW: 31.9 LBS
GW:37.4 LBS

BOSTON X-BACK CHAIR WITH WOOD SEAT

BEFORE ASSEMBLY

Thank you for purchasing this quality product. This product has been designed for easy assembly and constructed for durability. Please take the time to read and follow the assembly instructions carefully.

Be sure to check all packing material carefully for small parts which may have come loose inside the carton during shipment. Please separate, identify, and count all parts and metal hardware. Compare with part list to be sure all parts are present.
If hardware is missing or you have difficulty assembling this product, please call for us.

IMPORTANT NOTE:

- Place all wooden parts on a clean and smooth surface such as a rug or carpet to avoid the parts from being scratched.
- Remove all wrapping material, including staples & packing straps before you start to assemble.
- DO NOT tighten all screws and bolts until completely assembled.
- Keep all hardware parts out of reach of children.

ASSEMBLY TOOLS REQUIRED

NOT INCLUDED

PART LIST

When unpacking, please be careful not to discard any parts with the packaging. Before continuing, please make sure you have the following parts:

NO	Description	Qty	Sketch	NO	Description	Qty	Sketch
A	Chair back	1	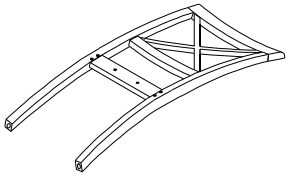	**B**	Seat Frame	1	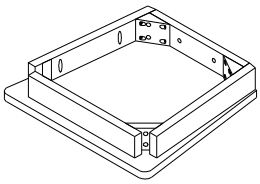
C	Front Leg	2	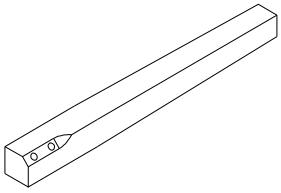				

HARDWARE LIST

When unpacking, please be careful not to discard any parts with the packaging. Before continuing, please make sure you have all of the following hardware:

NO	Description	Qty	Sketch	NO	Description	Qty	Sketch
1	Long bolt (M6x80mm)	4		2	Medium bolt (M6x60mm)	4	
3	Short bolt (M6x40mm)	2		4	Lock Washer (Φ6.5x9)	10	
5	Flat Washer (Φ6.5x19)	10		6	Allen Key (4mm)	1	

STEP 1

Attach frame (B) to the back (A) by using bolts (3) and (1) and washers (4) and (5). Tighten with Allen Key (6).

Note: DO NOT tighten any of the bolts, until the chair is assembled, then put on a flat level surface to make sure the chair is level and then tighten the bolts.

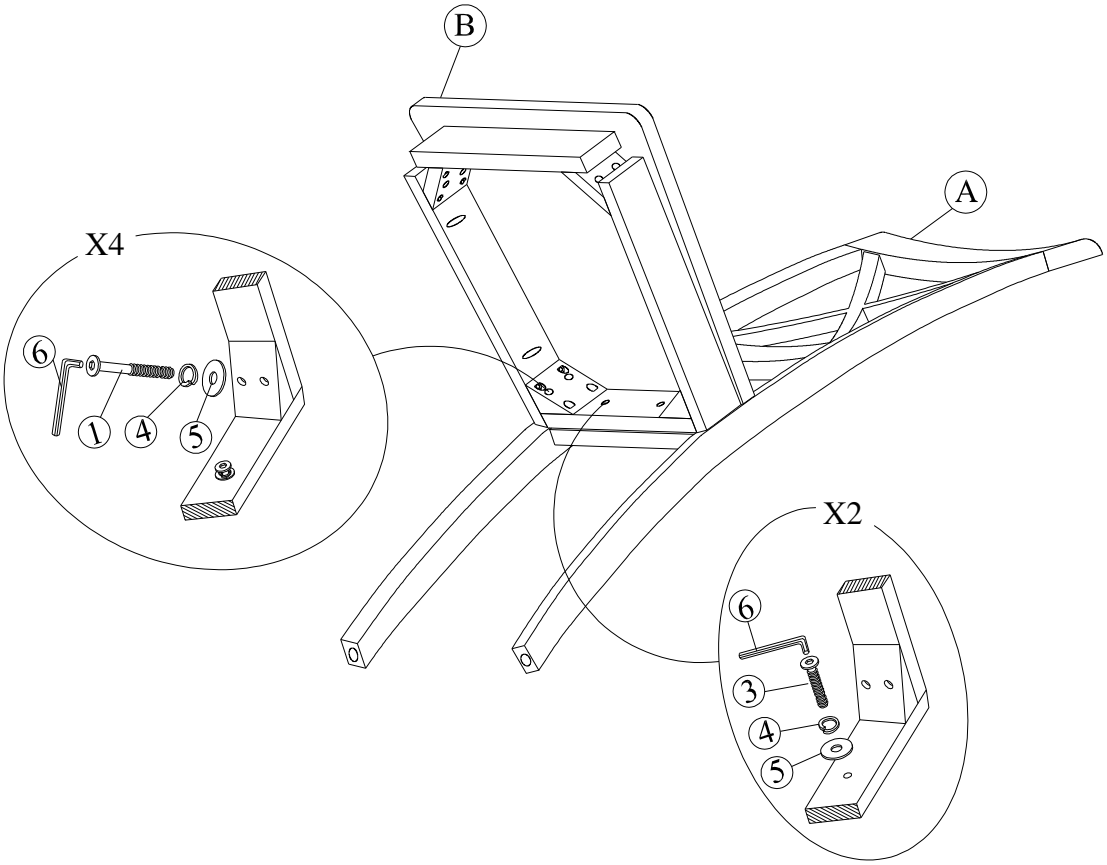

STEP 2

Attach front legs (C) to the seat frame. Use bolts (2), washers (4) and (5) .Tighten with Allen Key (6).
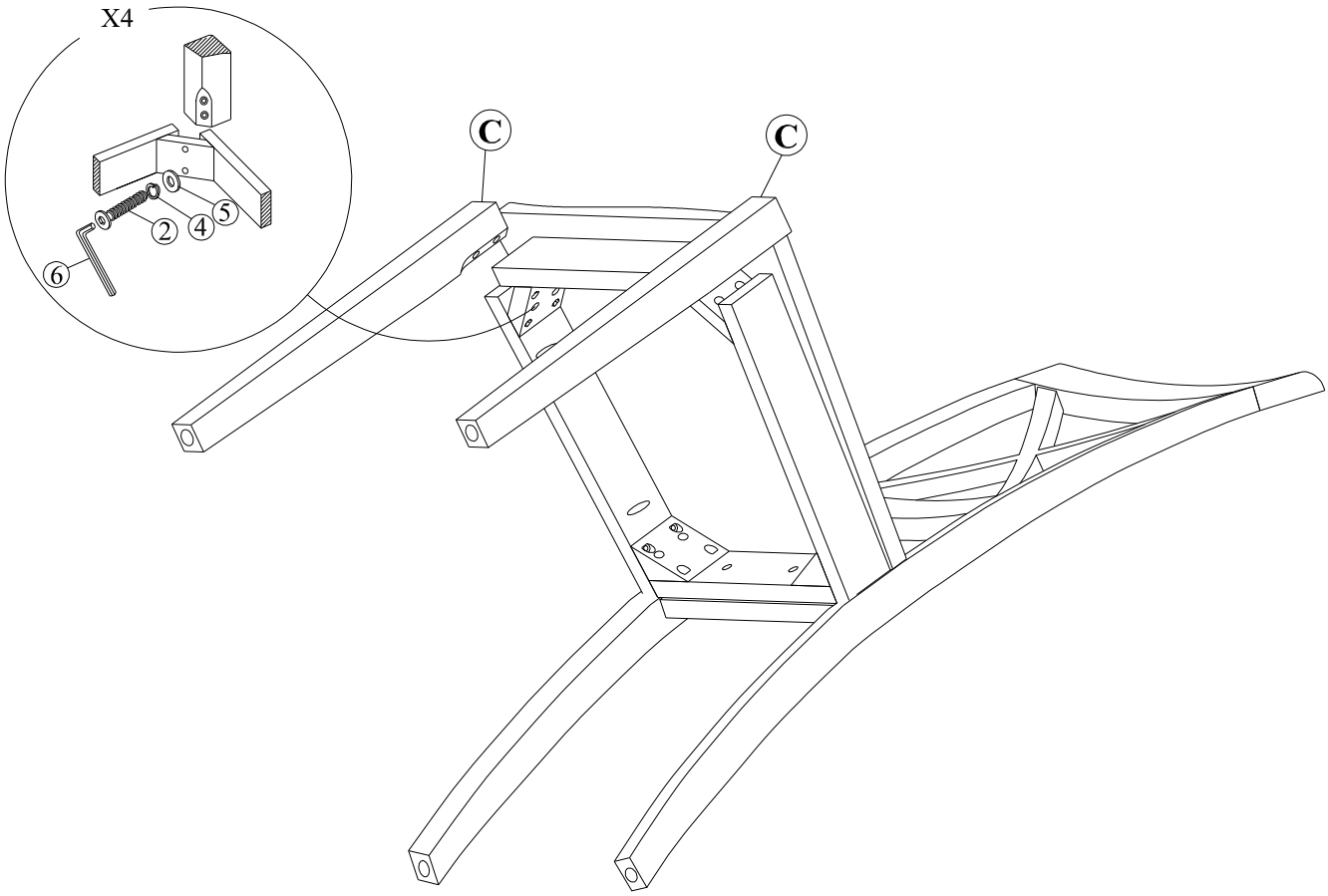
.